TOP INLET CONNECTION
PHC 150

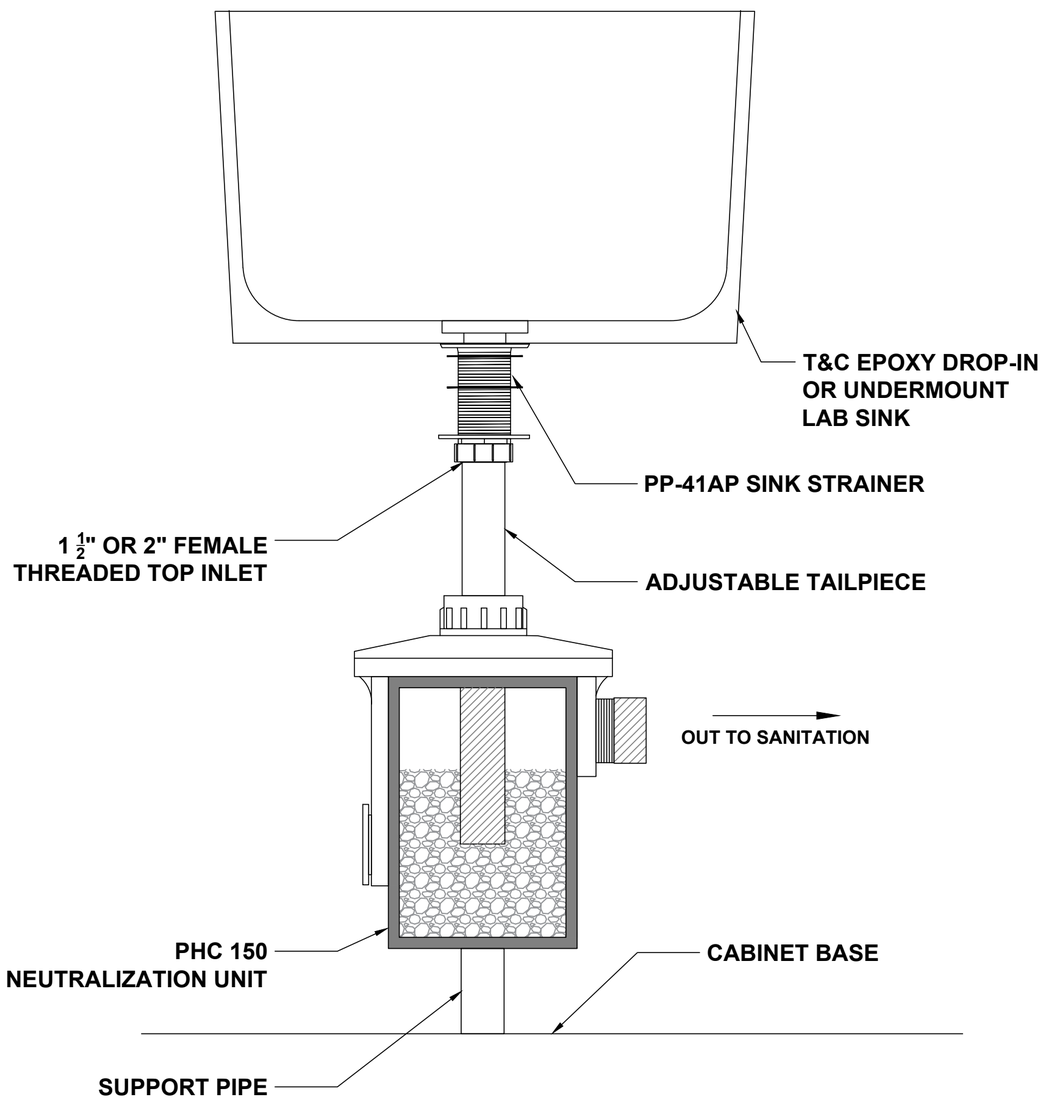

SIDE INLET CONNECTION
SI-PC-150

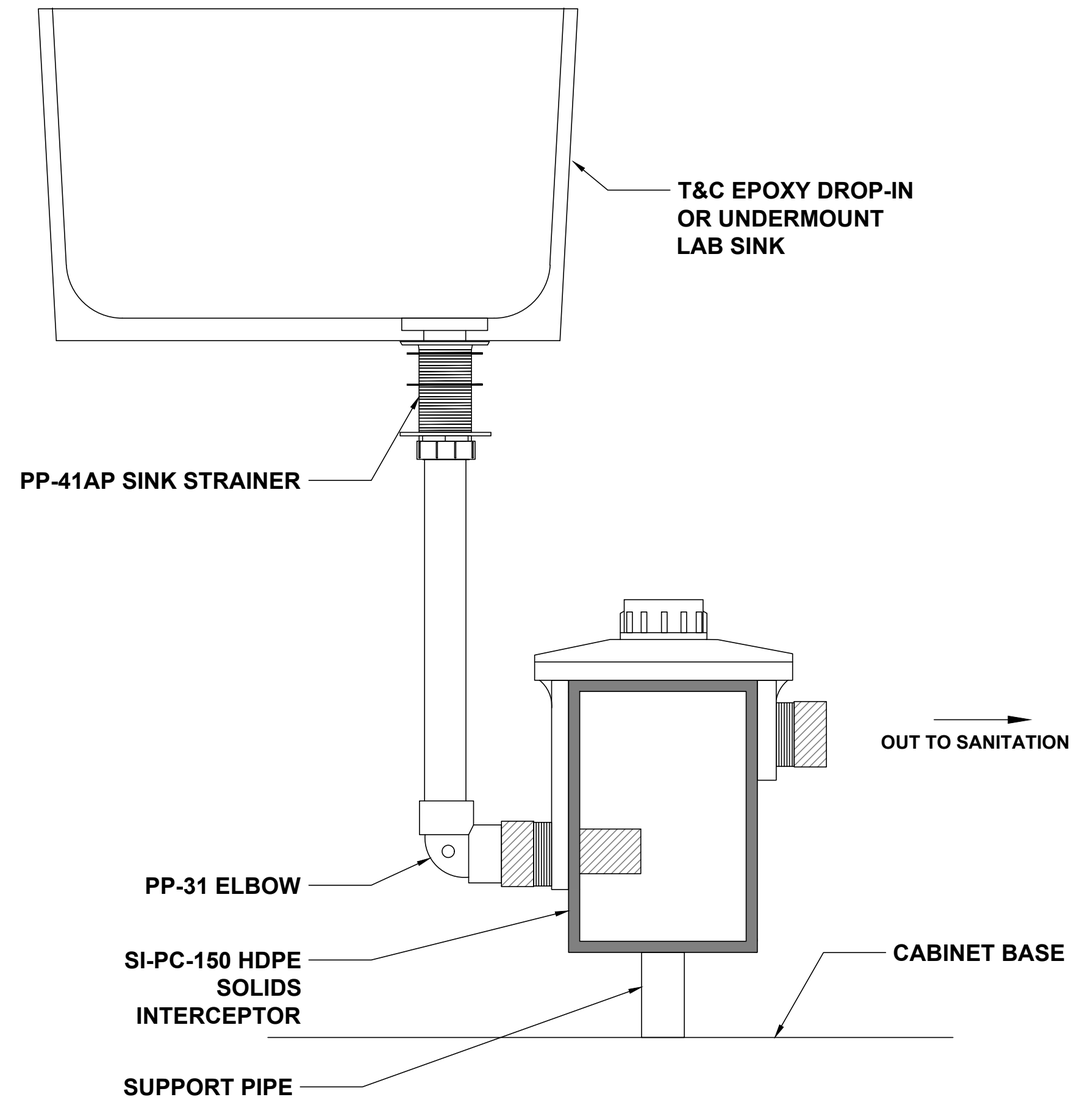

UNLESS STATED OTHERWISE DIMENSIONS ARE IN INCHES	MATERIAL: HDPE/PP				TITLE: **CARTRIDGE SYSTEM PIPING DIAGRAM**	NT SERIES	REV:
	WEIGHT [lb]: 3		NAME	DATE		SHEET 1 OF 1	SIZE:
		DRAWN	DR	06/12/2023			
	DO NOT SCALE DRAWING	CHECKED				SCALE: 1:2	

T&C PLASTICS
WWW.TANDCPLASTICS.COM
732-780-5300

THE INFORMATION CONTAINED IN THIS DRAWING IS THE SOLE PROPERTY OF TOWN & COUNTRY PLASTICS LLC. ANY REPRODUCTION IN PART OR AS A WHOLE WITHOUT THE WRITTEN PERMISSION OF TOWN & PLASTICS LLC IS PROHIBITED.