SPECIFICATION: T&C Plastics Model TC-INT-SAMP Low Profile HDPE molded Sample Port with a 4” inlet and outlet and 10,000 lb. load rated lid. If extensions are needed you will need to order 8" corrugated pipe and (2) gaskets to attached the pipe, contact T&C for pricing.

Function: Several areas require the use of sampling ports to provide the local authorities an opportunity to retrieve and test waste water discharged from the grease interceptor to ensure that the FOG contained within the effluent is within requirements.

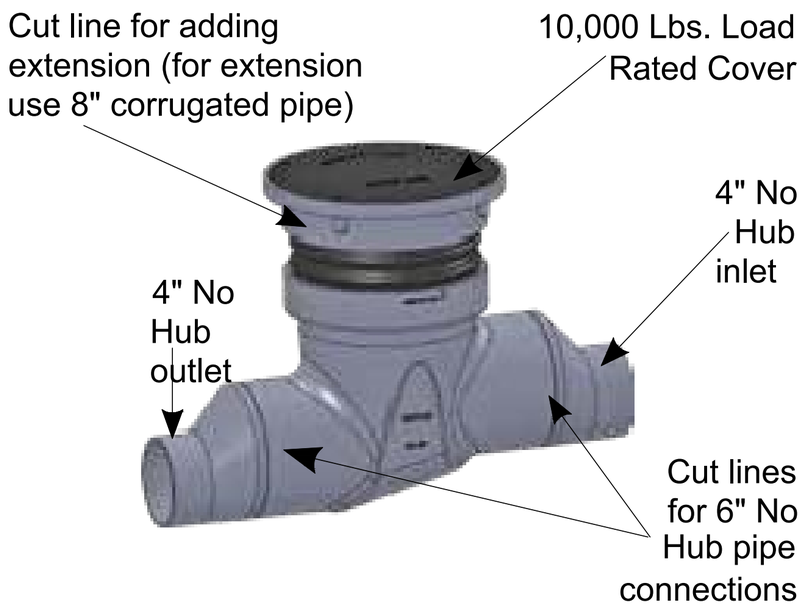

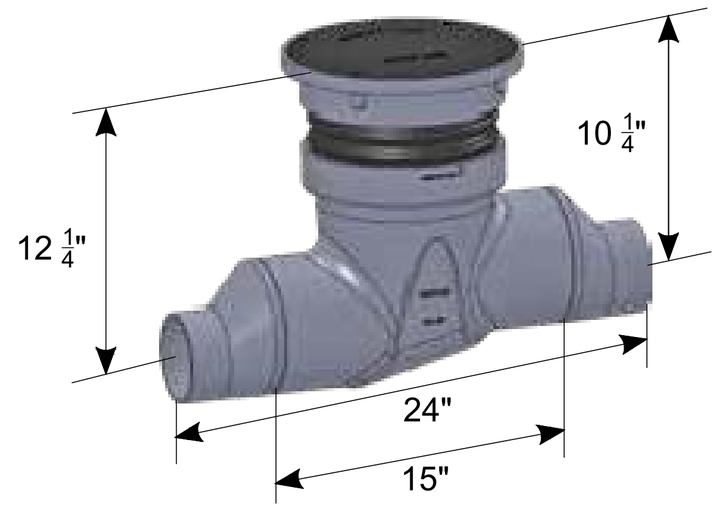

NOTES:	UNLESS STATED OTHERWISE DIMENSIONS ARE IN INCHES	MATERIAL:			TITLE:		REV:
		WEIGHT [lb]:		NAME / DATE	TC-INT-SAMP	SHEET 1 OF 1	SIZE:
			DRAWN	DR / 07/11/2023			
		DO NOT SCALE DRAWING	CHECKED			SCALE: 1:2	

T&C PLASTICS
WWW.TANDCPLASTICS.COM
732-780-5300

THE INFORMATION CONTAINED IN THIS DRAWING IS THE SOLE PROPERTY OF TOWN & COUNTRY PLASTICS LLC. ANY REPRODUCTION IN PART OR AS A WHOLE WITHOUT THE WRITTEN PERMISSION OF TOWN & PLASTICS LLC IS PROHIBITED.